The Fourth TEPHINET Southeast Asia and Western Pacific Bi-Regional Scientific Conference

November 26-30, 2007, Taipei, Taiwan

Instructions for Poster Presentations

Poster Sessions with Authors

The poster presentations give each abstract author an opportunity to acquaint conference participants with the fundamentals of his/her program, project, or study analysis quickly and easily.

First authors may exhibit their posters and answer questions during the "**Poster Session with Authors**", scheduled for November **27th, 29th and 30th, from 13:00 to 14:00.** Posters are to be displayed for four consecutive conference days, from November 27th to 30th. Authors are requested to mount their poster(s) on the display boards between **08:00-12:30 on November 27th** and dismount **after 18:00, November 30th**. The Organizer will dispose all posters left after 18:30, **November 30th**. Your full cooperation on the time request of poster handling will be highly appreciated.

The "**Poster Session with Authors**" schedule will be e-mailed to the authors by November 10th, please contact us at tephinet.biregion4@elitepco.com.tw if the schedule is not received by then.

What is a Poster?

A poster is a display that uses text, graphs, tables, charts, and pictures to present the highlights of a subject. It should be designed to (1) catch the viewer's attention, (2) quickly acquaint the viewer with the basics of your subject, and (3) make the viewer want to learn more.

Each presenter will be assigned a free-standing display board with a usable surface of about **150 cm x 90cm** and a sign indicating the poster number and title. Presenters must provide the "panels" (charts, text, illustrations, etc.) that make up the body of the presentation.

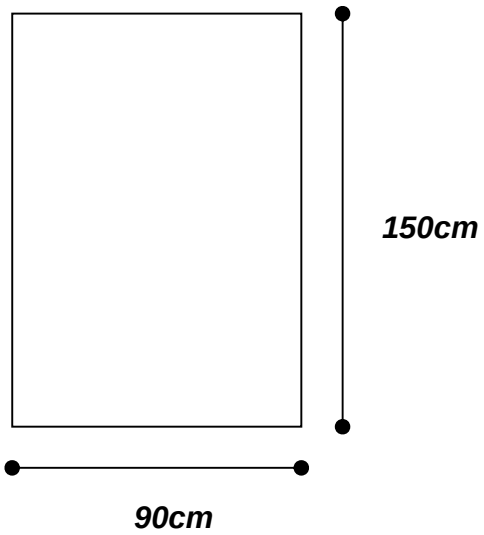

Keep it Simple, but Make Your Point

A good poster strikes a balance between giving too much or too little information. An effective poster presentation is not just a report or journal article hung on the wall. It should highlight the *major* points of the topic in a form that the viewer can absorb in a few minutes. Do not reproduce full pages of typed text, because people probably won't read them. They are more likely to pay attention to short phrases, statements set off with bullets, and clear graphics. On the other hand, the poster should have a point to make. Don't simply describe a public relations campaign; but include an analysis of why the campaign was, or was not successful. The viewer should come away with new knowledge or insights.

(Adapted from Guidelines for Poster Presentations, U.S. Government Printing Office 1986-631-008/24511)

Tips for Preparing Poster Presentations

- As a rule of thumb, eight poster panels is the maximum for an effective presentation.
- Keep the text brief.
- Don't use all capital letters for text. It is harder to read than upper & lower cases.
- Use graphics (charts, tables, pictures) that can be understood in a minute or less.
- Emphasize important information by using color, different type sizes, etc.
- Too many colors or fonts can be distracting. An effective poster is interesting without being too flamboyant.
- Connect ideas so that the flow of logic is clear from panel to panel.
- Consider numbering the panels to show the correct sequence.
- Assume that people will be looking at your poster from about 1meter away, and design it to be read from that distance.

Evaluation

Conference participants will have an opportunity to evaluate all posters exhibited during the conference period. Each participant has three votes, one vote for each poster presentation only. The poster presentations receiving the highest scores will be given an award, respectively.